UNIVERSITY OF CAMBRIDGE INTERNATIONAL EXAMINATIONS
General Certificate of Education Advanced Level

CANDIDATE NAME

CENTRE NUMBER

CANDIDATE NUMBER

0147448596

PHYSICS **9702/41**

Paper 4 A2 Structured Questions **May/June 2013**

2 hours

Candidates answer on the Question Paper.

No Additional Materials are required.

READ THESE INSTRUCTIONS FIRST

Write your Centre number, candidate number and name on all the work you hand in.
Write in dark blue or black pen.
You may use a pencil for any diagrams, graphs or rough working.
Do not use staples, paper clips, highlighters, glue or correction fluid.
DO **NOT** WRITE IN ANY BARCODES.

Answer **all** questions.

Electronic calculators may be used.
You may lose marks if you do not show your working or if you do not use appropriate units.

At the end of the examination, fasten all your work securely together.
The number of marks is given in brackets [ ] at the end of each question or part question.

For Examiner's Use	
1	
2	
3	
4	
5	
6	
7	
8	
9	
10	
11	
12	
Total	

This document consists of **23** printed pages and **1** blank page.

© UCLES 2013

Data

speed of light in free space, $c = 3.00 \times 10^{8}\ \text{m s}^{-1}$

permeability of free space, $\mu_0 = 4\pi \times 10^{-7}\ \text{H m}^{-1}$

permittivity of free space, $\varepsilon_0 = 8.85 \times 10^{-12}\ \text{F m}^{-1}$

$$\left(\frac{1}{4\pi\varepsilon_0} = 8.99 \cdot\ 10^{9}\ \text{m F}^{-1}\right)$$

elementary charge, $e = 1.60 \times 10^{-19}\ \text{C}$

the Planck constant, $h = 6.63 \times 10^{-34}\ \text{J s}$

unified atomic mass constant, $u = 1.66 \times 10^{-27}\ \text{kg}$

rest mass of electron, $m_e = 9.11 \times 10^{-31}\ \text{kg}$

rest mass of proton, $m_p = 1.67 \times 10^{-27}\ \text{kg}$

molar gas constant, $R = 8.31\ \text{J K}^{-1}\ \text{mol}^{-1}$

the Avogadro constant, $N_A = 6.02 \times 10^{23}\ \text{mol}^{-1}$

the Boltzmann constant, $k = 1.38 \times 10^{-23}\ \text{J K}^{-1}$

gravitational constant, $G = 6.67 \times 10^{-11}\ \text{N m}^2\ \text{kg}^{-2}$

acceleration of free fall, $g = 9.81\ \text{m s}^{-2}$

© UCLES 2013

Formulae

uniformly accelerated motion, $s = ut + \frac{1}{2}at^2$
$v^2 = u^2 + 2as$

work done on/by a gas, $W = p\Delta V$

gravitational potential, $\phi = -\frac{Gm}{r}$

hydrostatic pressure, $p = \rho gh$

pressure of an ideal gas, $p = \frac{1}{3}\frac{Nm}{V}\langle c^2 \rangle$

simple harmonic motion, $a = -\omega^2 x$

velocity of particle in s.h.m., $v = v_0 \cos \omega t$
$v = \pm \omega \sqrt{(x_0^2 - x^2)}$

electric potential, $V = \frac{Q}{4\pi\varepsilon_0 r}$

capacitors in series, $1/C = 1/C_1 + 1/C_2 + \ldots$

capacitors in parallel, $C = C_1 + C_2 + \ldots$

energy of charged capacitor, $W = \frac{1}{2}QV$

resistors in series, $R = R_1 + R_2 + \ldots$

resistors in parallel, $1/R = 1/R_1 + 1/R_2 + \ldots$

alternating current/voltage, $x = x_0 \sin \omega t$

radioactive decay, $x = x_0 \exp(-\lambda t)$

decay constant, $\lambda = \frac{0.693}{t_{\frac{1}{2}}}$

© UCLES 2013

[Turn over

Section A

Answer **all** the questions in the spaces provided.

1 **(a)** State what is meant by a *gravitational field*.

.....

.....

.....[2]

(b) In the Solar System, the planets may be assumed to be in circular orbits about the Sun. Data for the radii of the orbits of the Earth and Jupiter about the Sun are given in Fig. 1.1.

	radius of orbit / km
Earth	1.50×10^8
Jupiter	7.78×10^8

Fig. 1.1

(i) State Newton's law of gravitation.

.....

.....

.....

.....[3]

(ii) Use Newton's law to determine the ratio

$$\frac{\text{gravitational field strength due to the Sun at orbit of Earth}}{\text{gravitational field strength due to the Sun at orbit of Jupiter}}.$$

ratio = ... [3]

(c) The orbital period of the Earth about the Sun is T.

(i) Use ideas about circular motion to show that the mass M of the Sun is given by

$$M = \frac{4\pi^2 R^3}{GT^2}$$

where R is the radius of the Earth's orbit about the Sun and G is the gravitational constant.
Explain your working.

[3]

(ii) The orbital period T of the Earth about the Sun is 3.16×10^7 s.
The radius of the Earth's orbit is given in Fig. 1.1.
Use the expression in **(i)** to determine the mass of the Sun.

mass = ... kg [2]

© UCLES 2013

2 **(a)** State what is meant by an *ideal gas*.

.....

.....

.....

.....[3]

(b) Two cylinders A and B are connected by a tube of negligible volume, as shown in Fig. 2.1.

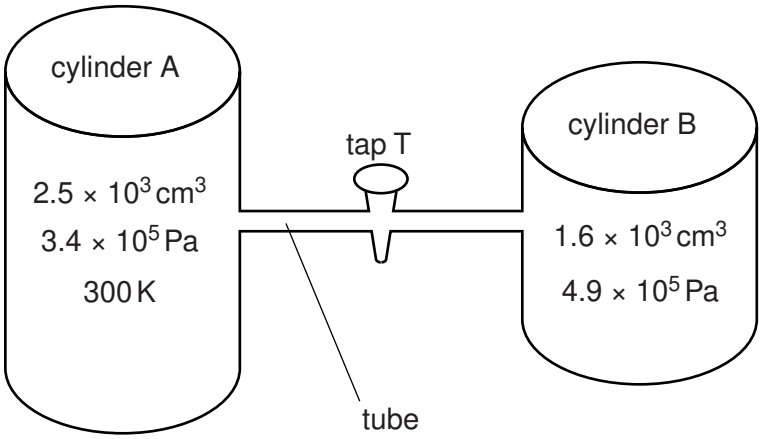

Fig. 2.1

Initially, tap T is closed. The cylinders contain an ideal gas at different pressures.

(i) Cylinder A has a constant volume of $2.5 \times 10^3\,cm^3$ and contains gas at pressure $3.4 \times 10^5\,Pa$ and temperature 300 K.

Show that cylinder A contains 0.34 mol of gas.

[1]

© UCLES 2013

(ii) Cylinder B has a constant volume of $1.6 \times 10^3\,cm^3$ and contains 0.20 mol of gas. When tap T is opened, the pressure of the gas in both cylinders is $3.9 \times 10^5\,Pa$. No thermal energy enters or leaves the gas.

Determine the final temperature of the gas.

temperature = ... K [2]

(c) By reference to work done and change in internal energy, suggest why the temperature of the gas in cylinder A has changed.

.....

.....

.....

.....[3]

3 A ball is held between two fixed points A and B by means of two stretched springs, as shown in Fig. 3.1.

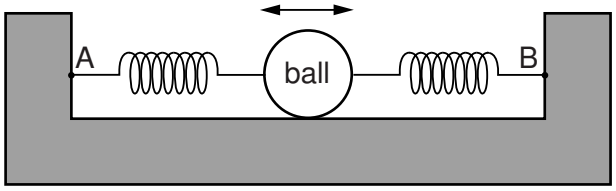

Fig. 3.1

The ball is free to oscillate along the straight line AB. The springs remain stretched and the motion of the ball is simple harmonic.

The variation with time t of the displacement x of the ball from its equilibrium position is shown in Fig. 3.2.

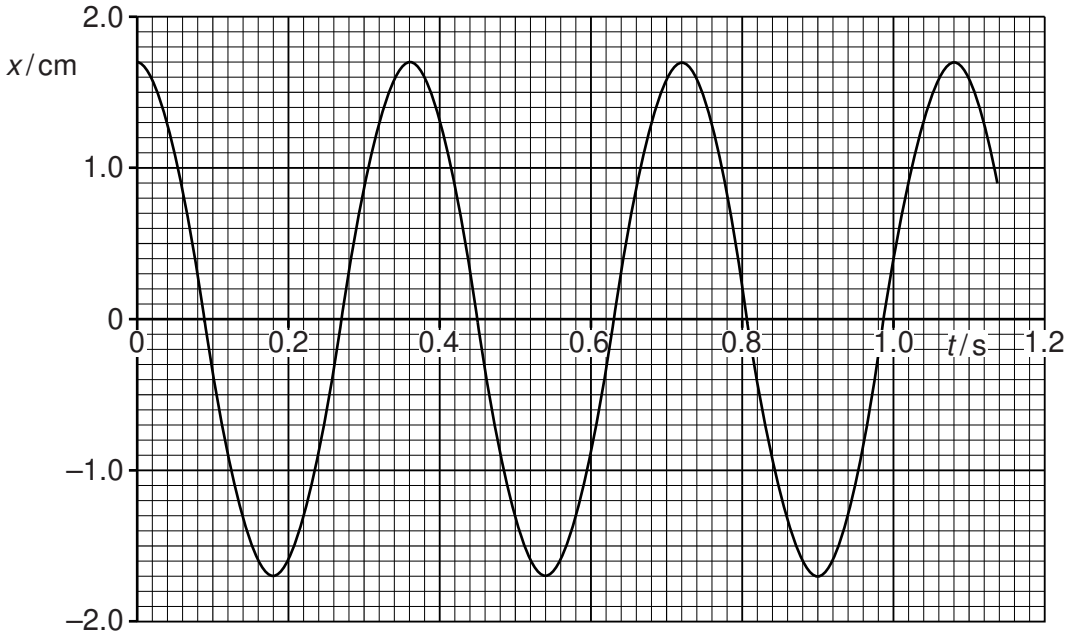

Fig. 3.2

(a) (i) Use Fig. 3.2 to determine, for the oscillations of the ball,

1. the amplitude,

amplitude = ... cm [1]

2. the frequency.

frequency = ... Hz [2]

© UCLES 2013

(ii) Show that the maximum acceleration of the ball is $5.2\,m\,s^{-2}$.

[2]

(b) Use your answers in **(a)** to plot, on the axes of Fig. 3.3, the variation with displacement x of the acceleration a of the ball.

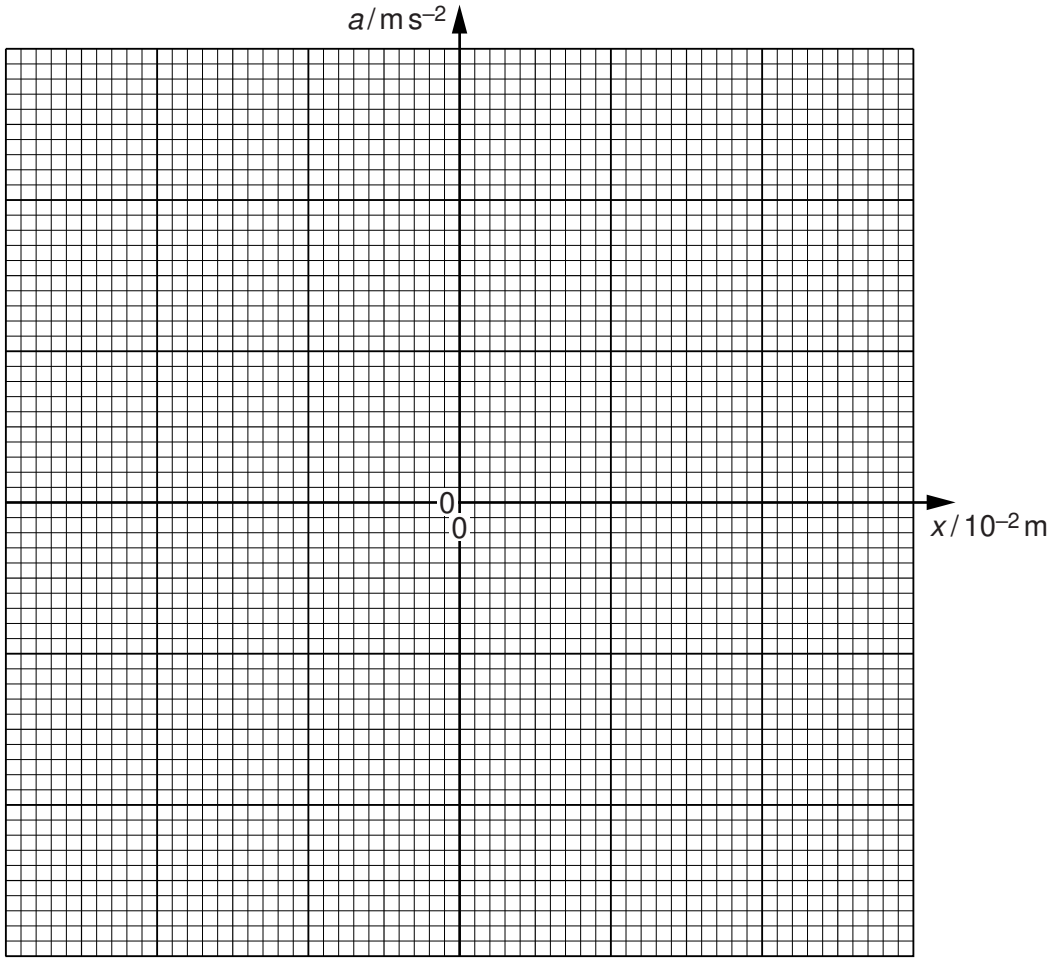

Fig. 3.3

[2]

(c) Calculate the displacement of the ball at which its kinetic energy is equal to one half of the maximum kinetic energy.

displacement = ... cm [3]

© UCLES 2013

4 **(a)** Define *electric potential* at a point.

.....

.....

.....[2]

(b) A charged particle is accelerated from rest in a vacuum through a potential difference V. Show that the final speed v of the particle is given by the expression

$$v = \sqrt{\left(\frac{2Vq}{m}\right)}$$

where $\frac{q}{m}$ is the ratio of the charge to the mass (the specific charge) of the particle.

[2]

(c) A particle with specific charge $+9.58 \times 10^7\,\text{C kg}^{-1}$ is moving in a vacuum towards a fixed metal sphere, as illustrated in Fig. 4.1.



Fig. 4.1

The initial speed of the particle is $2.5 \times 10^5\,\text{m s}^{-1}$ when it is a long distance from the sphere.
The sphere is positively charged and has a potential of +470 V.

Use the expression in **(b)** to determine whether the particle will reach the surface of the sphere.

[3]

5 **(a)** Define the *tesla*.

.....

.....

.....[2]

(b) A long solenoid has an area of cross-section of 28 cm^2, as shown in Fig. 5.1.

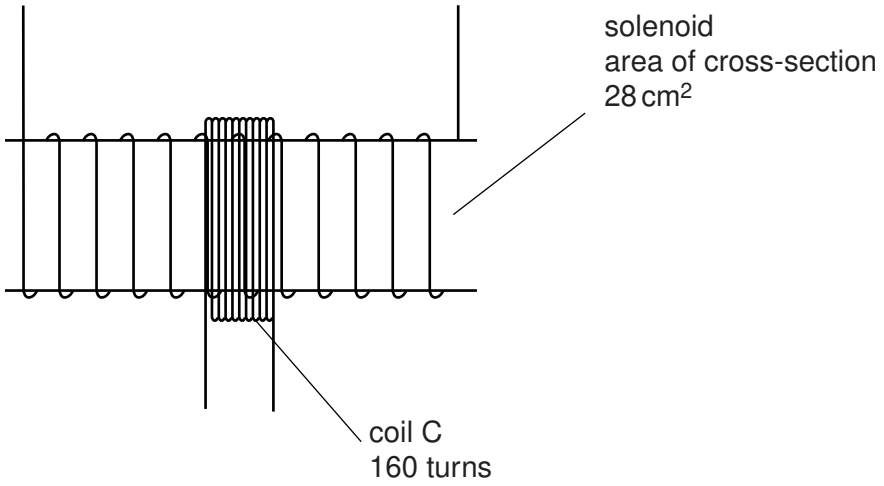

Fig. 5.1

A coil C consisting of 160 turns of insulated wire is wound tightly around the centre of the solenoid.
The magnetic flux density B at the centre of the solenoid is given by the expression

$$B = \mu_0 n I$$

where I is the current in the solenoid, n is a constant equal to $1.5 \times 10^3\,m^{-1}$ and μ_0 is the permeability of free space.

Calculate, for a current of 3.5 A in the solenoid,

(i) the magnetic flux density at the centre of the solenoid,

flux density = ... T [2]

(ii) the flux linkage in the coil C.

flux linkage = ... Wb [2]

(c) (i) State Faraday's law of electromagnetic induction.

.....

.....

.....[2]

(ii) The current in the solenoid in **(b)** is reversed in direction in a time of 0.80 s. Calculate the average e.m.f. induced in coil C.

e.m.f. = ... V [2]

6 A simple transformer is illustrated in Fig. 6.1.

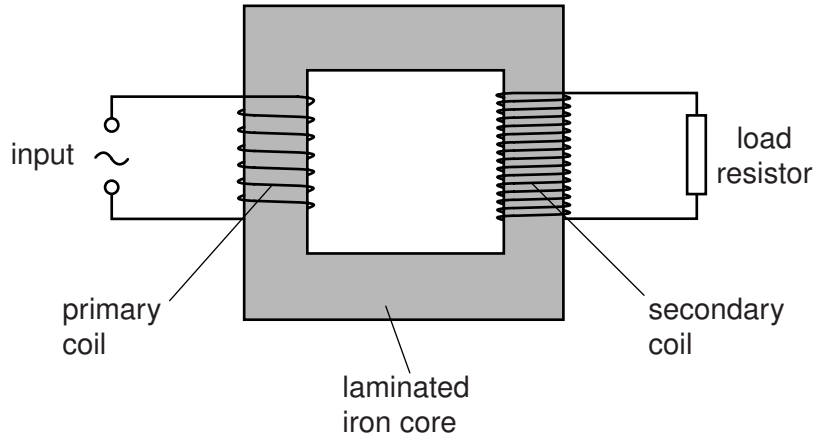

Fig. 6.1

(a) State

(i) why the iron core is laminated,

.....

.....

.....[2]

(ii) what is meant by an *ideal* transformer.

.....

.....[1]

(b) An ideal transformer has 300 turns on the primary coil and 8100 turns on the secondary coil.
The root-mean-square input voltage to the primary coil is 9.0 V.

Calculate the peak voltage across the load resistor connected to the secondary coil.

peak voltage = ... V [2]

© UCLES 2013

7 Some data for the work function energy Φ and the threshold frequency f_0 of some metal surfaces are given in Fig. 7.1.

metal	$\Phi / 10^{-19}$ J	$f_0 / 10^{14}$ Hz
sodium	3.8	5.8
zinc	5.8	8.8
platinum	9.0	

Fig. 7.1

(a) (i) State what is meant by the *threshold frequency*.

.....

.....

.....[2]

(ii) Calculate the threshold frequency for platinum.

threshold frequency = ... Hz [2]

(b) Electromagnetic radiation having a continuous spectrum of wavelengths between 300 nm and 600 nm is incident, in turn, on each of the metals listed in Fig. 7.1.
Determine which metals, if any, will give rise to the emission of electrons.

.....

.....

.....

.....[2]

(c) When light of a particular intensity and frequency is incident on a metal surface, electrons are emitted.
State and explain the effect, if any, on the rate of emission of electrons from this surface for light of the same intensity and higher frequency.

.....

.....

.....

.....[3]

8 **(a)** State what is meant by a *nuclear fusion reaction*.

.....

.....

.....[2]

(b) One nuclear reaction that takes place in the core of the Sun is represented by the equation

$$^{2}_{1}\mathrm{H} + {}^{1}_{1}\mathrm{H} \rightarrow {}^{3}_{2}\mathrm{He} + \text{energy}.$$

Data for the nuclei are given in Fig. 8.1.

	mass/u
proton $^{1}_{1}\mathrm{H}$	1.00728
deuterium $^{2}_{1}\mathrm{H}$	2.01410
helium $^{3}_{2}\mathrm{He}$	3.01605

Fig. 8.1

(i) Calculate the energy, in joules, released in this reaction.

energy = ... J [3]

(ii) The temperature in the core of the Sun is approximately 1.6×10^{7} K.
Suggest why such a high temperature is necessary for this reaction to take place.

.....

.....

.....[2]

© UCLES 2013

Section B

Answer **all** the questions in the spaces provided.

9 **(a)** Suggest electrical sensing devices, one in each case, that may be used to monitor changes in

(i) light intensity,

.....[1]

(ii) the width of a crack in a welded joint,

.....[1]

(iii) the intensity of an ultrasound beam.

.....[1]

© UCLES 2013

[Turn over

(b) A student designs the circuit of Fig. 9.1 to detect changes in temperature in the range 0 °C to 100 °C.

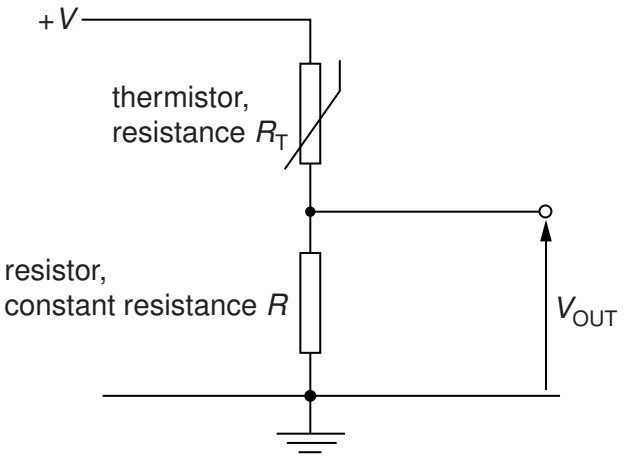

Fig. 9.1

The resistance of the thermistor is R_T and that of the resistor is R.
The student monitors the potential difference V_{OUT}.

State and explain

(i) whether V_{OUT} increases or decreases as the temperature of the thermistor increases,

.....

.....

.....

.....[3]

(ii) whether the change in V_{OUT} varies linearly with the change in temperature of the thermistor.

.....

.....

.....

.....[2]

© UCLES 2013

10 (a) Distinguish between sharpness and contrast in X-ray imaging.

sharpness: .....

.....

contrast: .....

.....

[2]

(b) State two causes of loss of sharpness of an X-ray image.

1. .....

.....

2. .....

.....

[2]

(c) Data for the linear attenuation (absorption) coefficient μ of X-ray photons are given in Fig. 10.1.

	μ/cm^{-1}
bone	2.85
muscle	0.95

Fig. 10.1

A parallel beam of X-rays is incident, separately, on a thickness of 3.5 cm of bone and on a muscle of thickness 8.0 cm.

(i) Calculate the ratio

$$\frac{\text{intensity of X-ray beam transmitted through bone}}{\text{intensity of X-ray beam transmitted through muscle}}.$$

ratio = ... [3]

(ii) Use your answer in **(i)** to suggest whether an X-ray image of the bone and muscle would show good or poor contrast.

.....

.....

.....[2]

11 A radio station emits an amplitude-modulated wave for the transmission of music.

(a) (i) State what is meant by an *amplitude-modulated* (AM) wave.

.....

.....

.....[2]

(ii) Give two reasons why the transmitted wave is modulated, rather than transmitting the information signal directly as a radio wave.

1. .....

.....

2. .....

.....

[2]

(b) The variation with frequency f of the amplitude A of the transmitted wave is shown in Fig. 11.1.

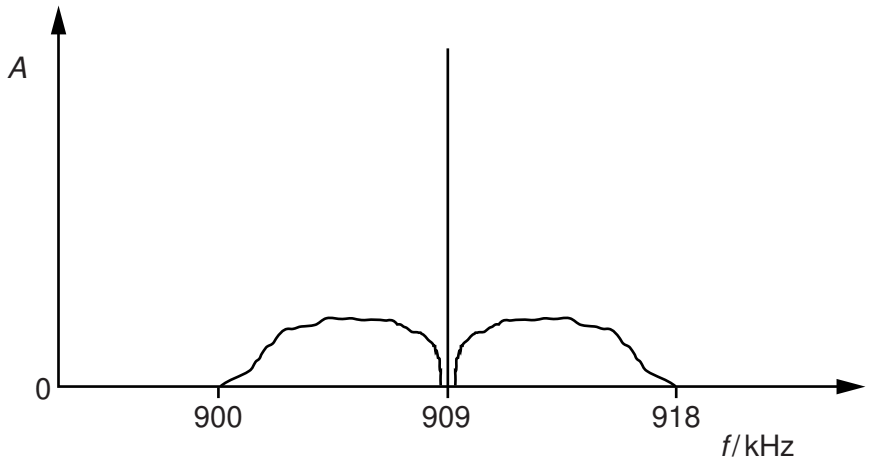

Fig. 11.1

For this transmission, determine

(i) the wavelength of the carrier wave,

wavelength = ... m [2]

(ii) the bandwidth,

bandwidth = ... kHz [1]

(iii) the maximum frequency, in Hz, of the transmitted audio signal.

frequency = ... Hz [1]

© UCLES 2013

12 An optic fibre is used for the transmission of digital telephone signals. The power input to the optic fibre is 9.8 mW. The effective noise level in the receiver circuit is 0.36 μW, as illustrated in Fig. 12.1.

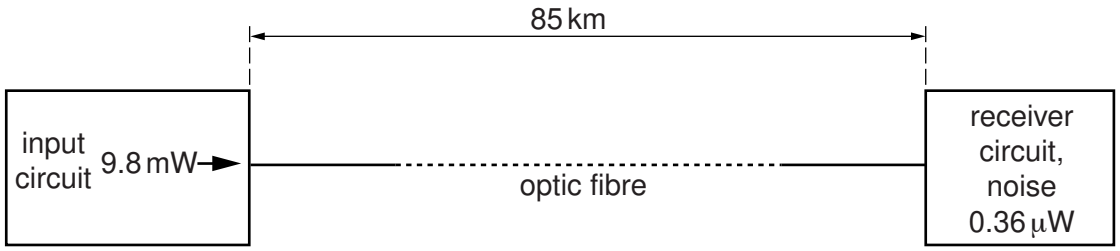

Fig. 12.1

The signal-to-noise ratio at the receiver must not fall below 28 dB.
For this transmission without any repeater amplifiers, the maximum length of the optic fibre is 85 km.

(a) Calculate the minimum input signal power to the receiver.

power = ... W [2]

(b) Use your answer in **(a)** to calculate the attenuation in the fibre.

attenuation = ... dB [2]

(c) Determine the attenuation per unit length of the fibre.

attenuation per unit length = ... $dB\,km^{-1}$ [1]

© UCLES 2013

BLANK PAGE

Permission to reproduce items where third-party owned material protected by copyright is included has been sought and cleared where possible. Every reasonable effort has been made by the publisher (UCLES) to trace copyright holders, but if any items requiring clearance have unwittingly been included, the publisher will be pleased to make amends at the earliest possible opportunity.

University of Cambridge International Examinations is part of the Cambridge Assessment Group. Cambridge Assessment is the brand name of University of Cambridge Local Examinations Syndicate (UCLES), which is itself a department of the University of Cambridge.

© UCLES 2013